ON Semiconductor®
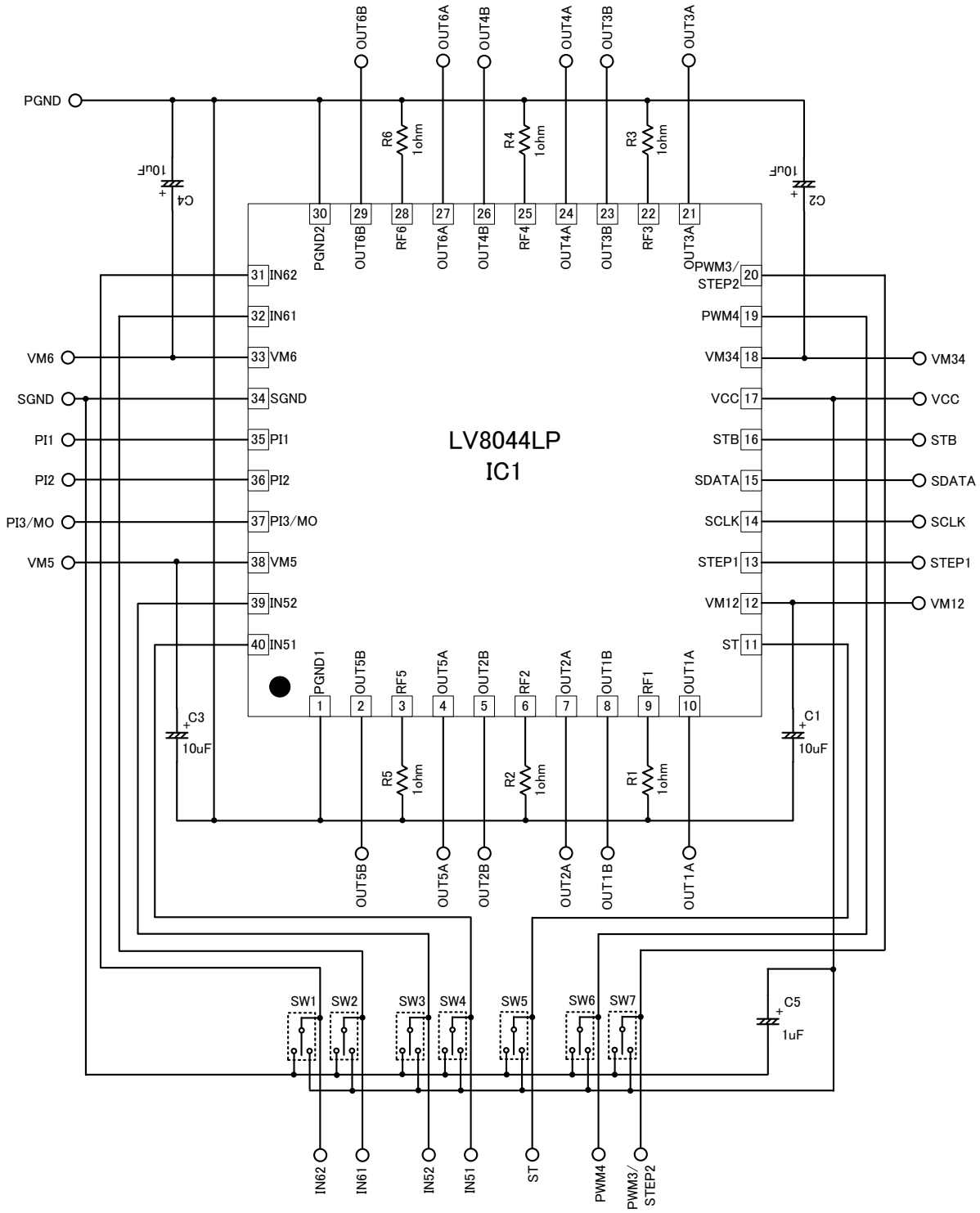
Schematic for the LV8044LPGEVB Evaluation Board