ON Semiconductor

Schematic for the LC717A30UJ00GEVB Evaluation Board

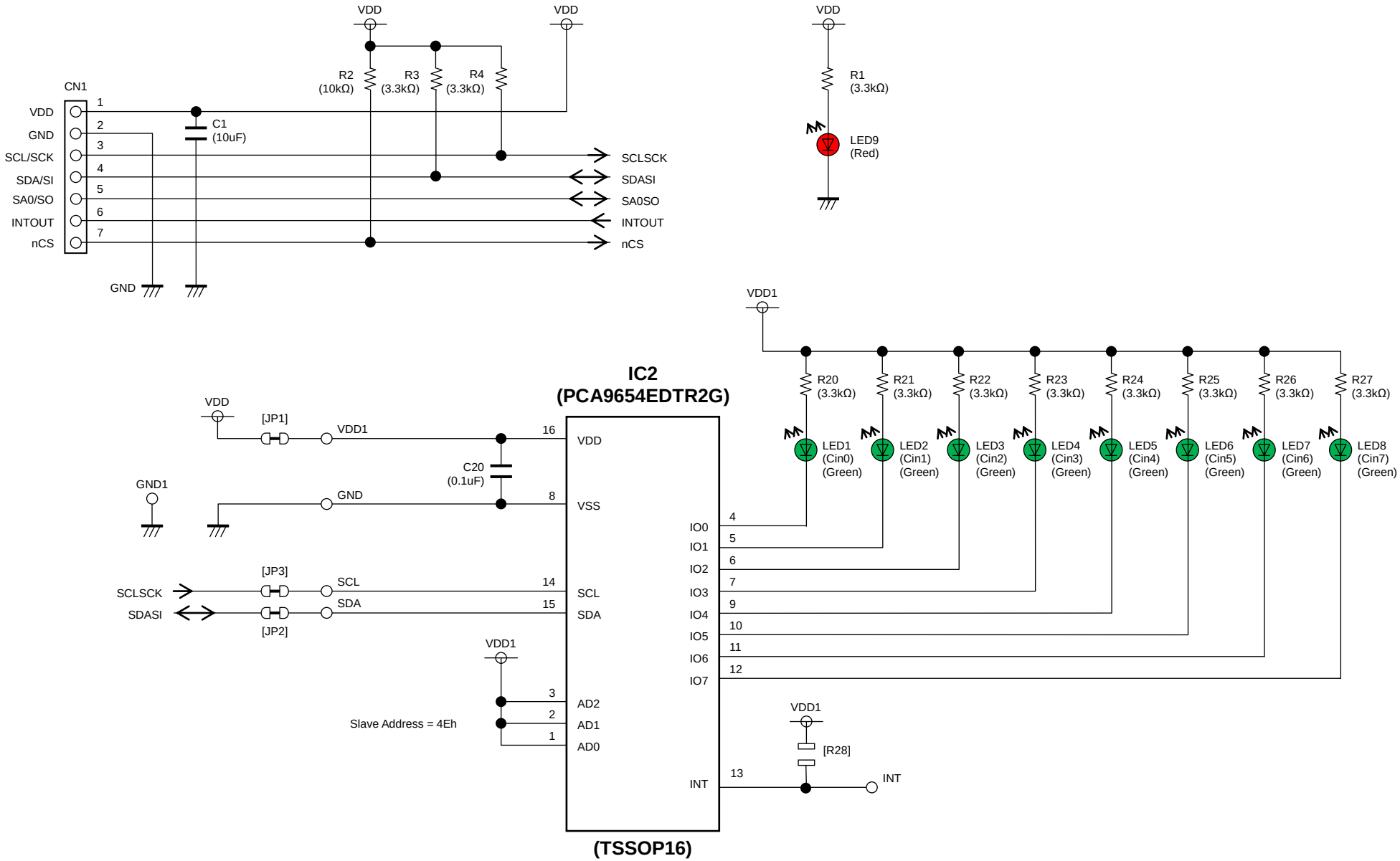

Schematic for the LC717A30UJ00GEVB Evaluation Board

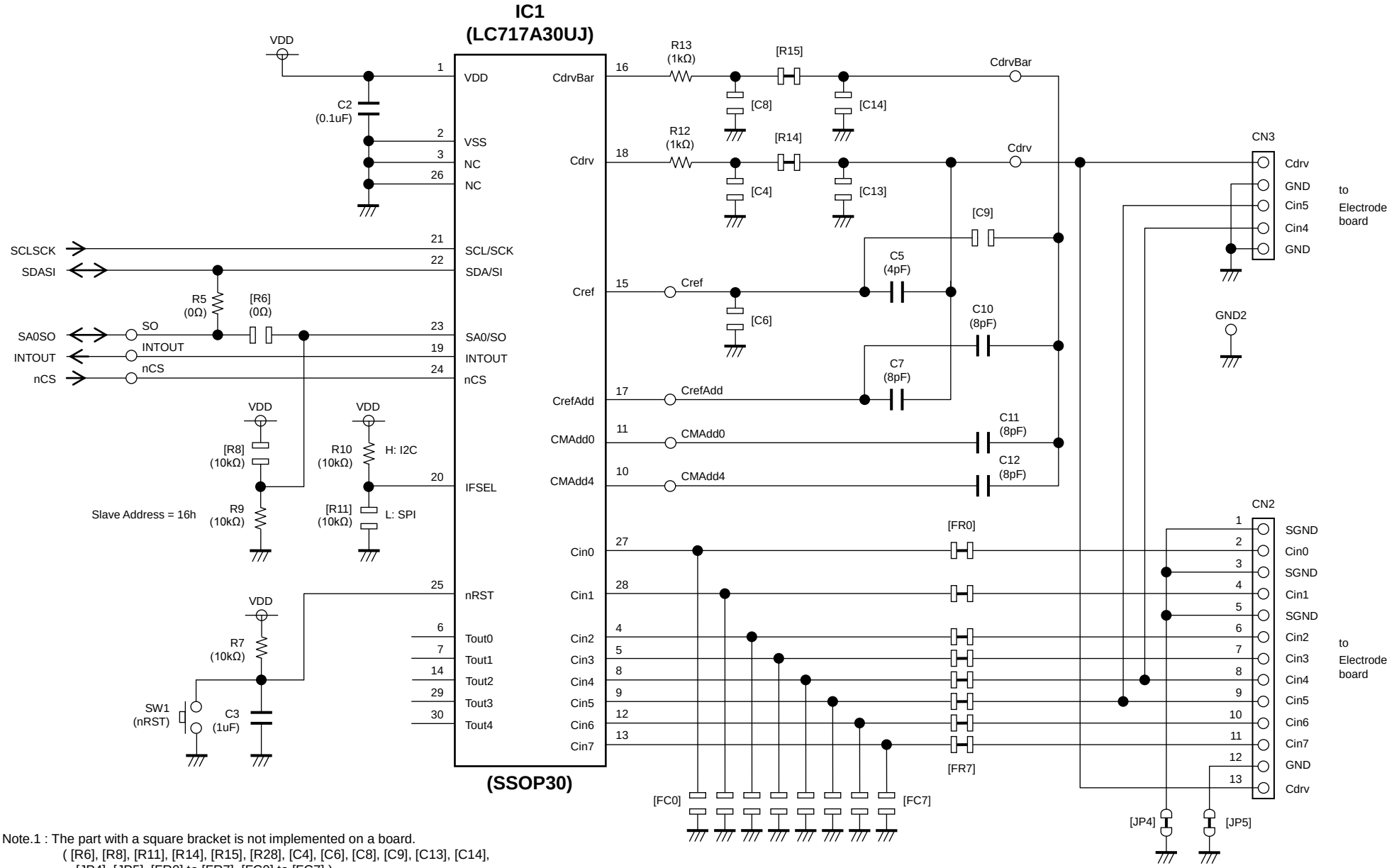

Note.1 : The part with a square bracket is not implemented on a board.
([R6], [R8], [R11], [R14], [R15], [R28], [C4], [C6], [C8], [C9], [C13], [C14], [JP4], [JP5], [FR0] to [FR7], [FC0] to [FC7])